Interactive Flat Panel Display

TA-65/TA-75/TA-86



UHD Resolution

8 GB RAM
128 GB ROM

40 touch points

Android 16

Zero bonding

Share screen

USB Type-C

8 arrays

Split screen

Remote control

Copyright © 2009-2026 TACTEASY TECHNOLOGY CO., LTD All Rights Reserved.

Display			
Size	65inch	75inch	86inch
Type	DLED		
Aspect ratio	16:9		
Screen display size (mm)	1428*803	1646*926	1892*1064
Physical resolution	3840 × 2160 (4k)		
Display color	10bit/1.07 Billion		
Refresh rate	60Hz		
Brightness	≥350cd/㎡		
Contrast	4000:1		
Response time	6ms		
Viewing angle	178°/ 178°		
Display protection	Anti-glare 4mm full tempered high explosion-proof glass		
Backlight life	50000 hours		

System	
CPU	4*A72+ 4*A53
System version	Android 16
RAM	8 GB
ROM	128 GB
Operating temperature	0℃-40℃

INTERACTIVITY	
Touch Technology	IR
Touch points	40 points
Positioning Accuracy	1mm
Drive Mode	No driver required
Writing method	Fingers, touch pens or other non-transparent objects not less than 5mm in diameter
Palm erase	Yes
Communication Port	USB 3.0
Reaction time (Single touch)	＜4ms
Touch resolution	32768 x 32768
Times of touches	Unlimited time in theoretical
Transfer speed	12Mb/s

Copyright © 2009-2026 TACTEASY TECHNOLOGY CO., LTD All Rights Reserved.

Compatibility	Support windows, Android, Mac OS, Linux

Connectivity

Back port	
HDMI IN	X1
HDMI OUT	X1
RJ45	X1
USB-C	X1
USB-A	X2
TOUCH USB	X1
SPDIF	X1
RS232	X1
TF Card	X1
MIC	X1
Earphone	X1
WIFI	Wi-Fi 6
OPS slot	X1
Front port	
HDMI IN	X1
USB-A 3.0	X3
USB TOUCH	x1
USB-C	x1

Dimension

Overall dimensions (mm, L×W×T)	1485*105*905	1708*105*1027	1954*105*1165
Net weight	37.7kg	51.5kg	67.2kg
Gross weight	46.5kg	64.6kg	85.2kg
Packaging size (mm, L×W×T)	1600*205*1002	1846*215*1180	2092*215*1319
VESA	500x400	600x400	800x400

Power Supply

Consumption rate	≤190W	≤270W	≤320W
Standby power	≤1W		
Voltage range	AC100-240V~50/60Hz		

Copyright © 2009-2026 TACTEASY TECHNOLOGY CO., LTD All Rights Reserved.

Speaker specification	2 x 15 Watts
Operating temperature	32℉-104℉ (0℃-40℃)
Storage temperature	-4℉-140℉ (-20℃-60℃)
Humidity	5%-80% relative humidity, non-condensing

Accessories

Power cable	x1
Remote control	x1
Wall mount	x1
HDMI &Touch USB cable	x1
Whiteboard pen	x2

65”

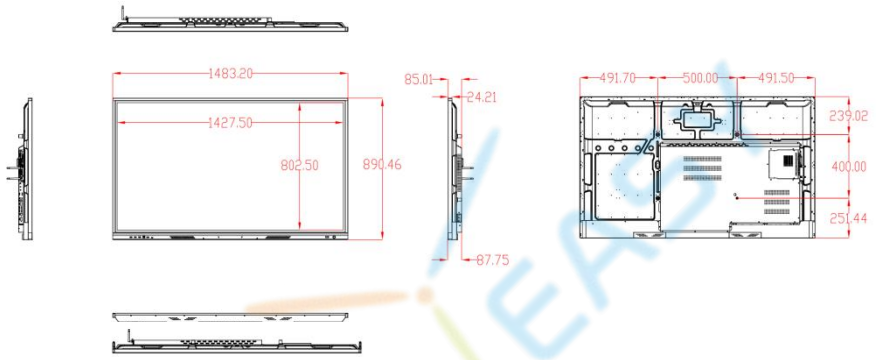

75”

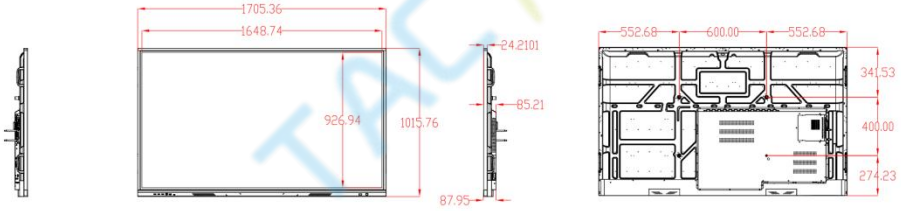

86”

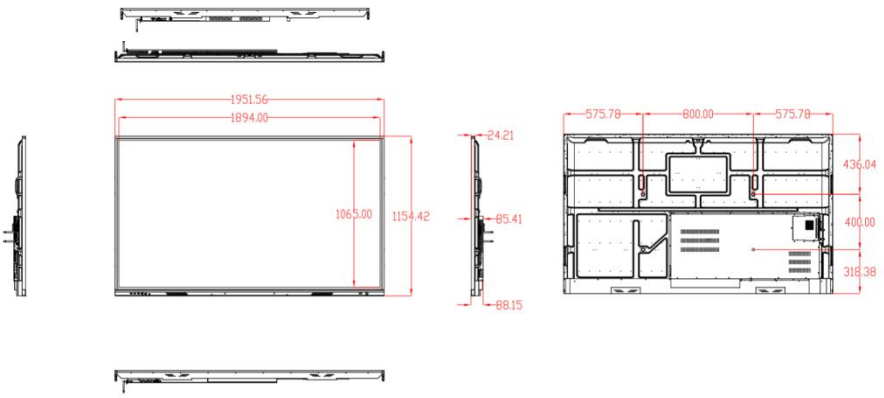

TACTEASY TECHNOLOGY CO., LTD
www.tacteasy.com
1004-1005, Building C, Longhua Digital Innovation Center, Shenzhen, China
market@tacteasy.com

Copyright © 2009-2026 TACTEASY TECHNOLOGY CO., LTD All Rights Reserved.