Outdoor Floor-Standing Digital Signage

TP-32/TP-43/ TP-49/ TP-55/ TP-65



High-Performance Chip

Large Storage Capacity

Low Power Consumption

Vertical Design

Diverse Network Connectivity

High Durability

Powerful Audio Output

Easy Installation

Copyright © 2009-2026 TACTEASY TECHNOLOGY CO., LTD All Rights Reserved.

Product Series

Model NO.	TP-32/TP-43/ TP-49/ TP-55/ TP-65

Display

LCD size	32"	43"	49"	55"	65"
Display size(mm)	708.42*398.48	951.93*535.46	1084.76*610.18	1217.59*684.89	1438.97*809.42
Display brand	BOE / CSOT				
Resolution	1920×1080/3840×2160				
Brightness	2000-5000 cd/m²				
Contrast	4000:1				
Response time	6ms				
Refresh rate	60Hz				
Backlight life	50000 hours				

Motherboard Spec (optional)

Chipset	RK3568
CPU architecture	Cortex-A55×4 2.0Ghz
CPU Core	Quad Core
RAM	2GB
ROM	32GB
OS	Android11.0
Port	2*USB, 1*RJ 45

Motherboard Spec (optional)

Chipset	I3-8TH/ I5-8TH/ I7-8TH
RAM	2GB/4G/8G
ROM	32GB/64GB
OS	Windows10

Electrical Spec

Power requirements	AC 100-240V , 50/60 Hz
Power consumption	≤ 239W
Standby power	＜3W

Copyright © 2009-2026 TACTEASY TECHNOLOGY CO., LTD All Rights Reserved.

Audio output power	8Ω / 8W×2
IP65 rating	IP65
Waterproof	Three-layer composite sealing strip
Dust prevention	3M high air volume filter
Anti theft	three-level door lock protection, hidden screw design
Explosion proof	6mm full tempered high explosion-proof glass
Anti rust and anti-corrosion	High-strength galvanized steel sheet
Heat dissipation method	intelligent temperature controlled air cooling system
Temperature protection	supports high temperature protection
Fan	Industrial grade high air volume silent fan, supporting speed regulation and noise reduction
Working temperature	-20℃ -70℃
Storage temperature	-20 ℃ -60 ℃
Storage humidity	10% -90%
Working humidity	5% -90%

Network support

WI-FI Standard	Built-in WiFi and Bluetooth.
Ethernet	Support 10/100M adaptive Ethernet
4G network(optional)	Expandable 4G internet access

Weight

MODEL	TP-32	TP-43	TP-49	TP-55	TP-65
N.W.	51KG	68KG	80KG	110KG	145KG
G.W.	65KG	84KG	98KG	130KG	170KG

Size

Product size(L x W x H)mm	1800×400×480	1800×400×620	1900×400×700	2000×400×800	2200×490×980
Package size(L x W x H)mm	1850×420×530	1850×420×670	1950×420×750	2050×420×850	2250×520×1030
Standby power	＜3W				

Accessories

Accessories	Power cord×1 Remote control×1

Copyright © 2009-2026 TACTEASY TECHNOLOGY CO., LTD All Rights Reserved.

Product dimension diagram

TP-32

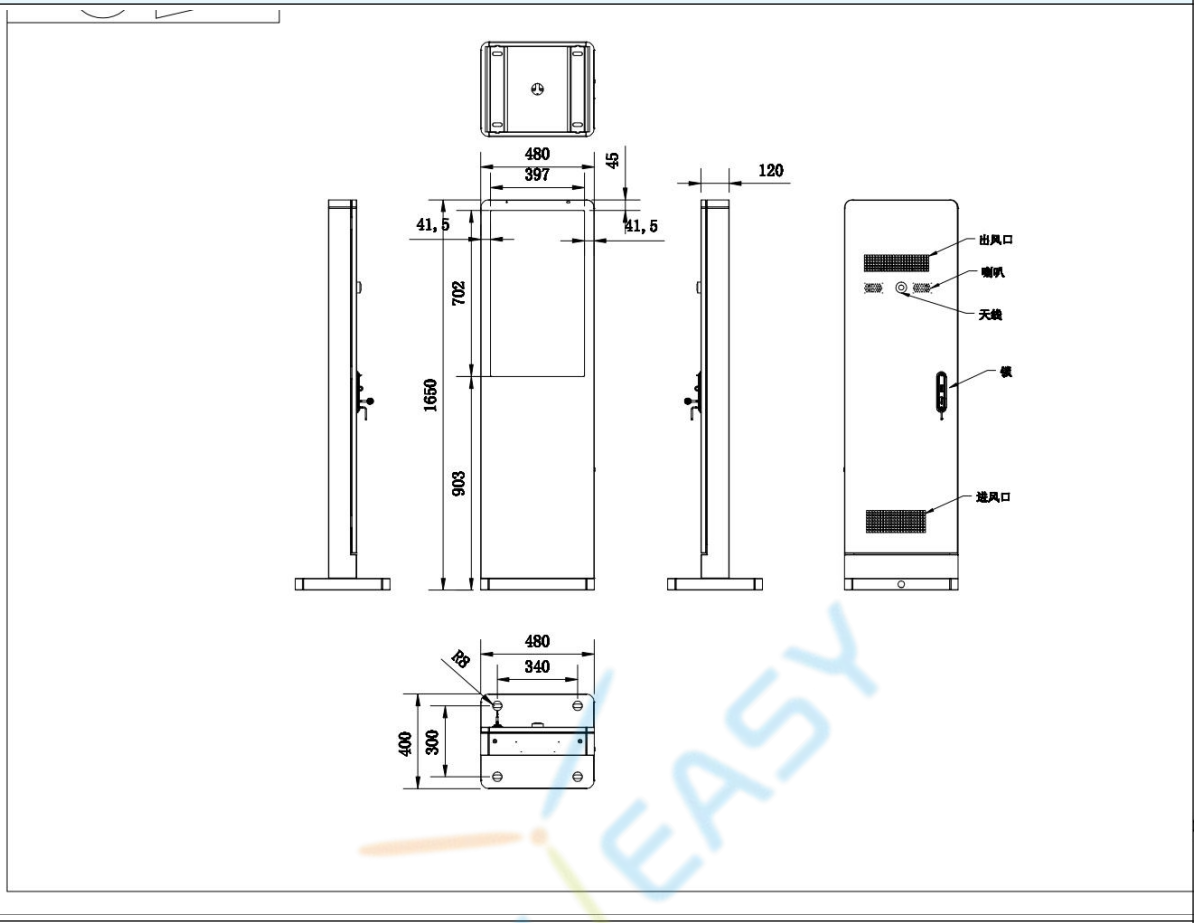

TP-43

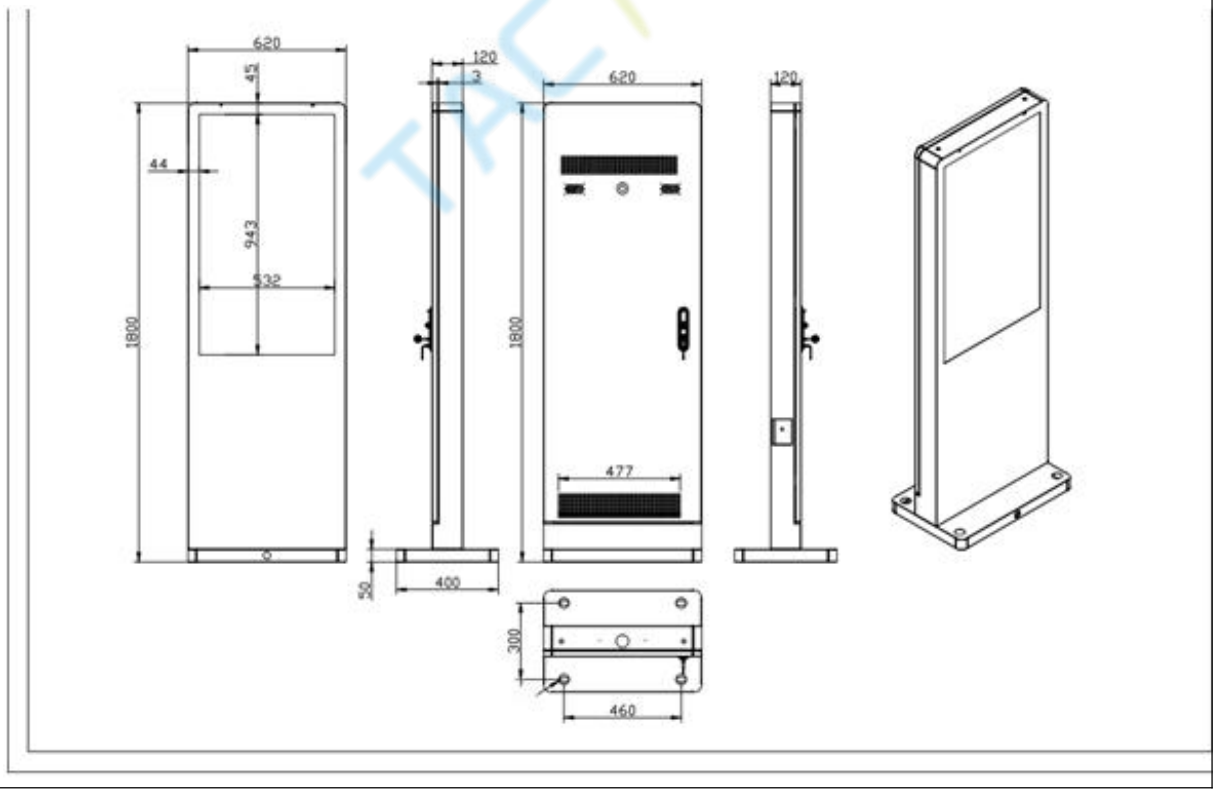

Copyright © 2009-2026 TACTEASY TECHNOLOGY CO., LTD All Rights Reserved.

TP-49	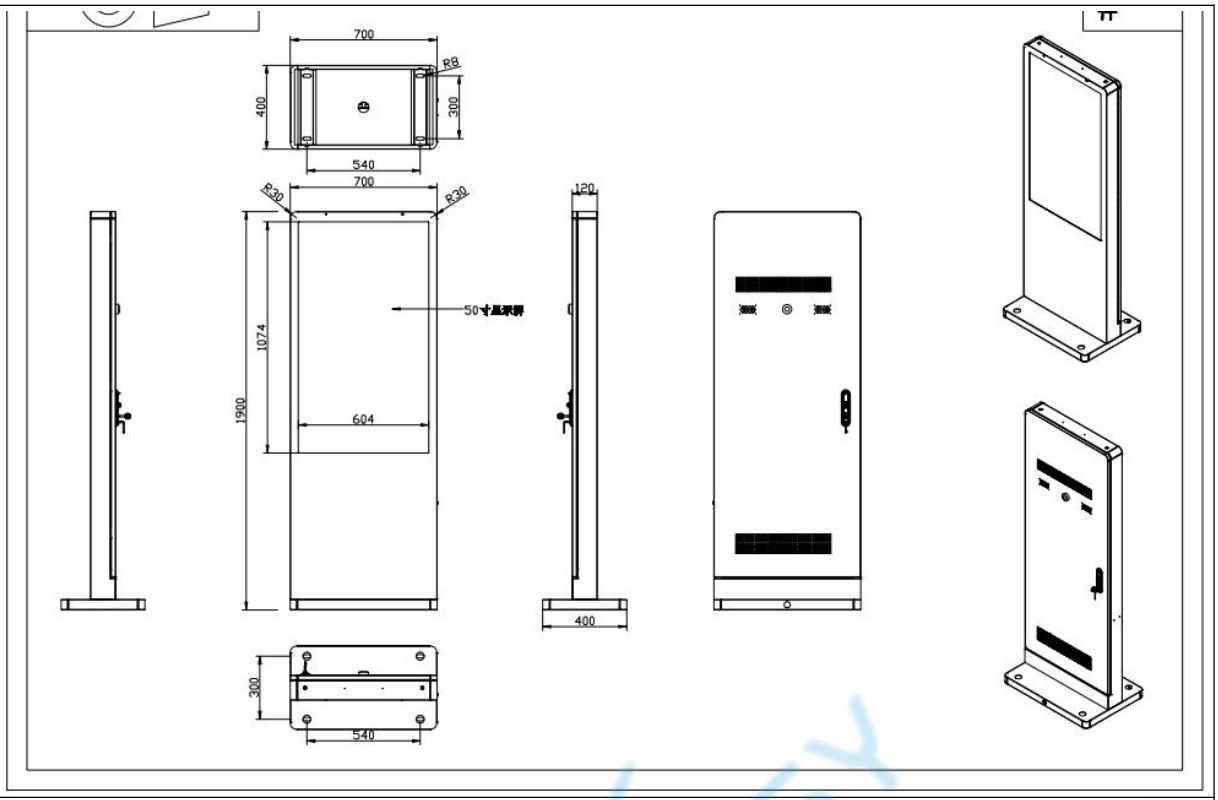
TP-55	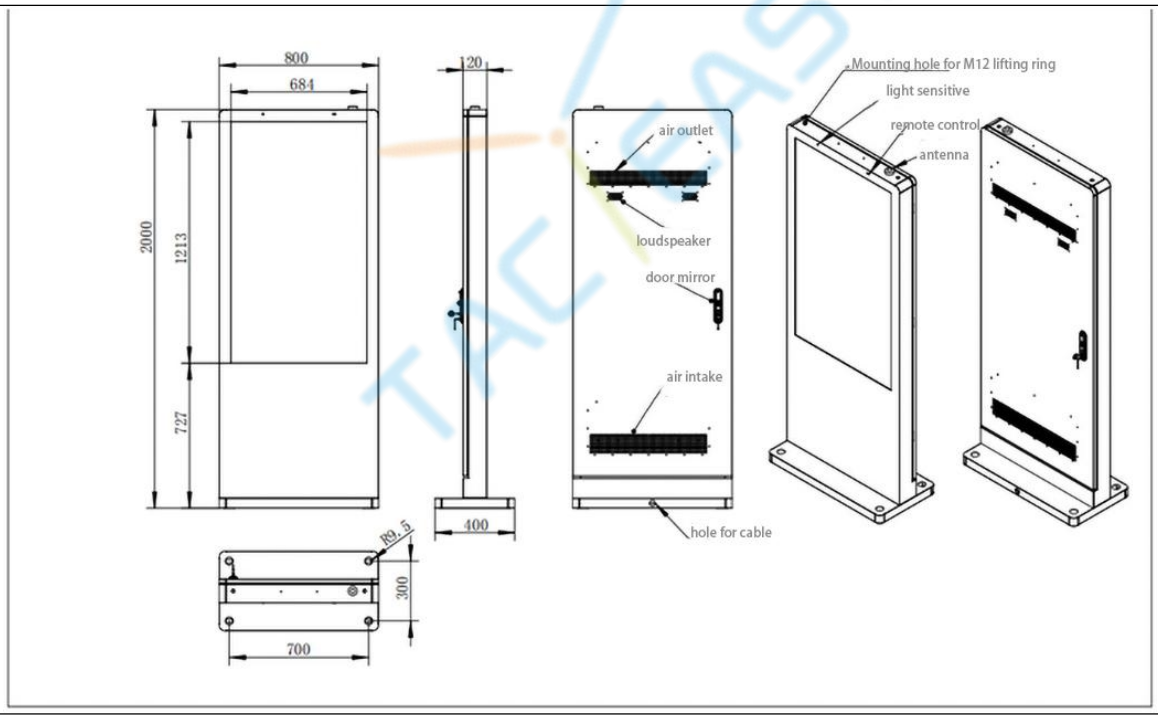

Copyright © 2009-2026 TACTEASY TECHNOLOGY CO., LTD All Rights Reserved.

TP-65	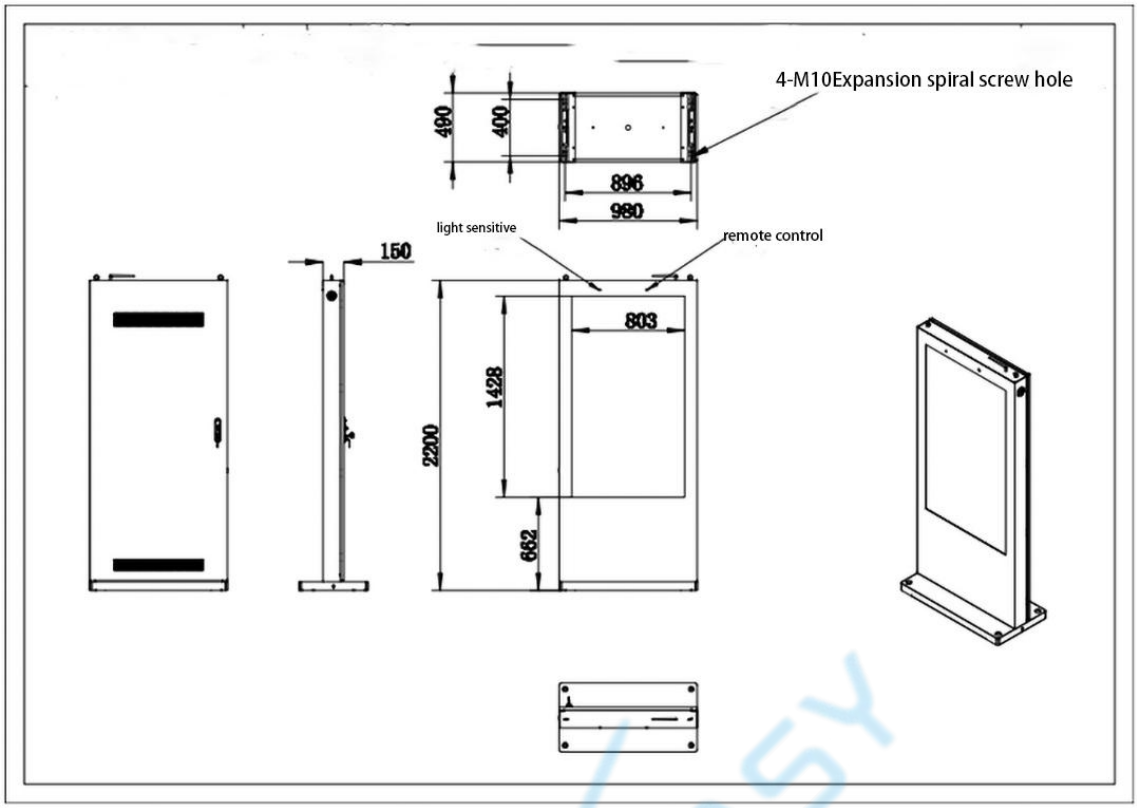

TACTEASY TECHNOLOGY CO., LTD
www.tacteasy.com
1004-1005, Building C, Longhua Digital Innovation Center, Shenzhen, China
market@tacteasy.com

Copyright © 2009-2026 TACTEASY TECHNOLOGY CO., LTD All Rights Reserved.